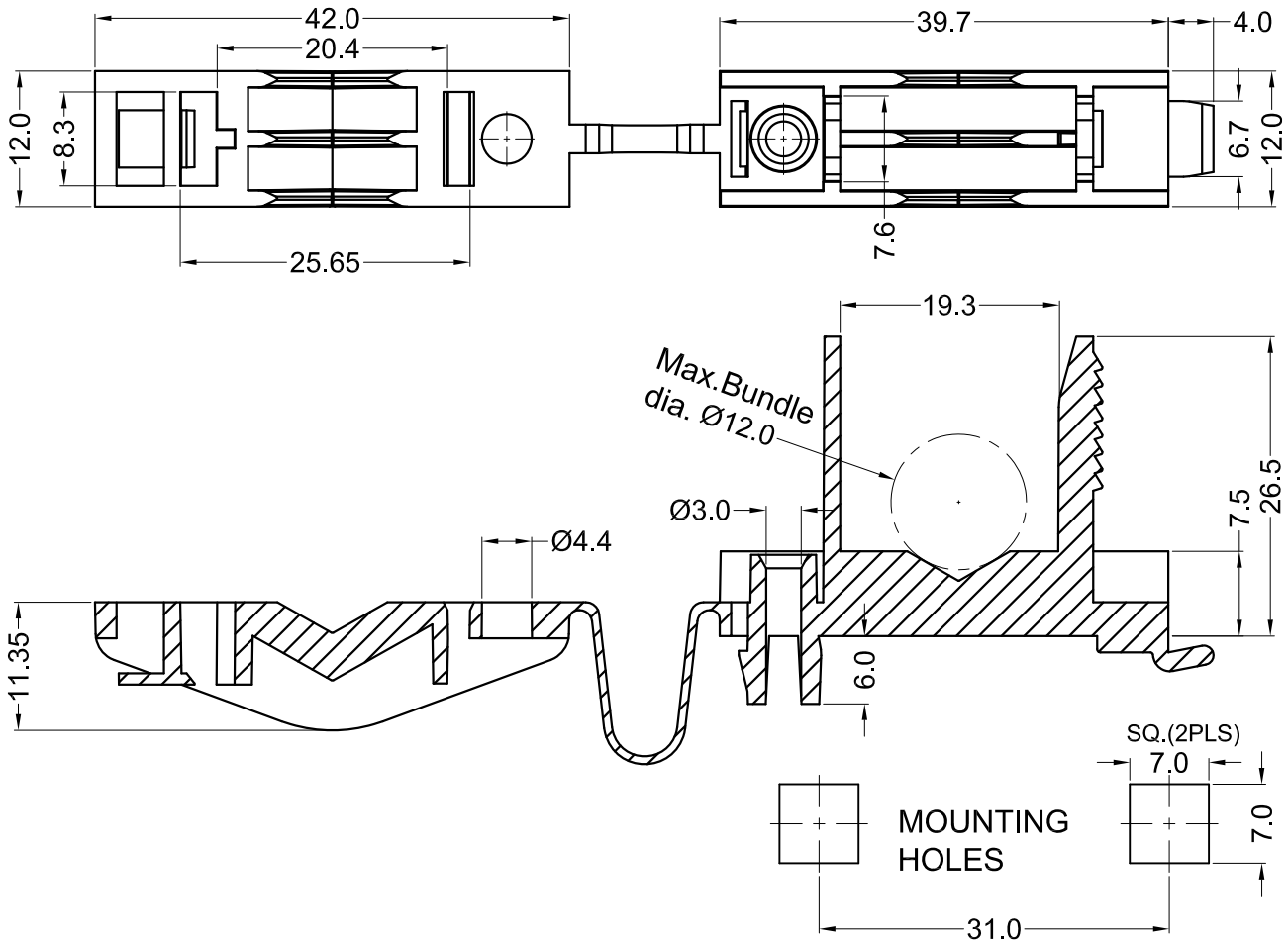

Part No.	Part Name	Color	Self Tapping Mounting Screws	Panel Thickness	Material
60777	GHMCC-4-01	Natural	(1X)M3.5,M4,#8	0.8-1.2	PA66 UL94 V2
60784	GHMCC-4-19				PA66 UL94 V0

Notes:RoHS Compliant.

Gecko International Co.						DATE	2015-6-1	DIMENSION	TOLERANCE
TITLE	CABLE CLAMPS - HINGED LOCKING					SCALE	FIT	L≦4	±0.10
PART NAME	GHMCC-4	MOLD NO.	S0830	DRAW	PLK	UNIT	MM	4＜L≦15	±0.20
PART NO.	SEE TABLE	MATERIAL	SEE TABLE	DESIGN	PLK	VERSION	A0	15＜L≦50	±0.30
DWG NO.	E6237	COLOR	SEE TABLE	APPROVAL	FDL	VIEW		50＜L≦100	±0.40